ESS 265
Instrumentation, Data Processing and Data Analysis in Space Physics

Lecture 4: Magnetometers

C.T. Russell

May 5, 2008

Magnetometers: Where do we need measurements?

- There are measurable magnetic fields almost everywhere one can explore. They almost always provide very useful information.
- They can provide information about the interiors of bodies that are otherwise inaccessible. They can provide information on physical processes that are occurring in remote locations.
- There are extensive magnetometer arrays on the surface of the Earth.
- There are magnetometers being flown to every corner of the solar system.
- While the techniques are similar on the ground and in space, each region has its own special requirements. Sometimes in fact, space is a more benign environment for instrumentation.

Early Magnetometry

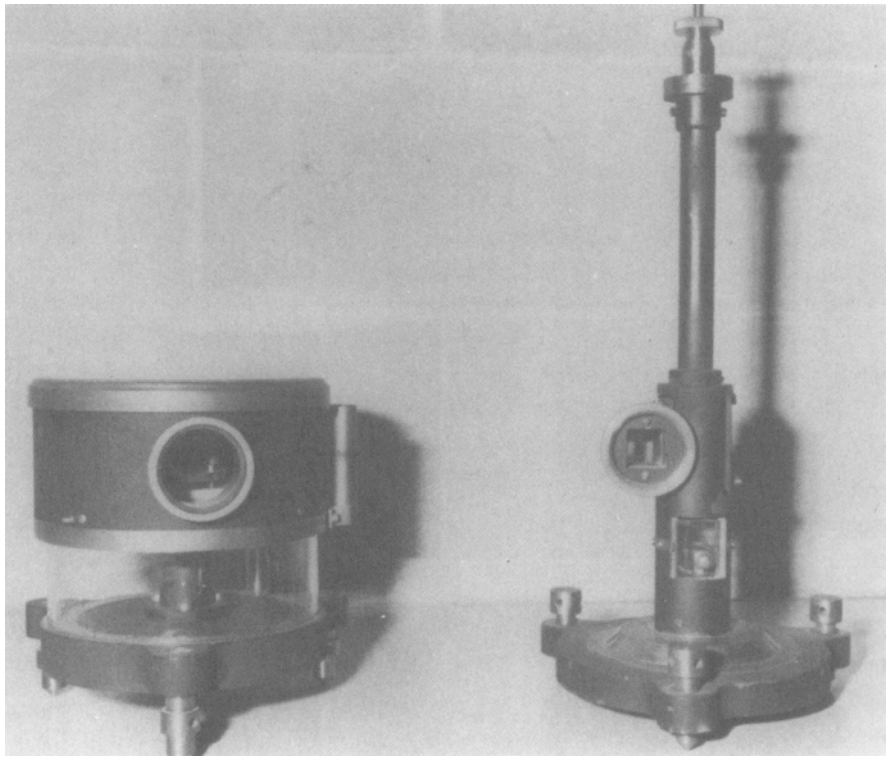

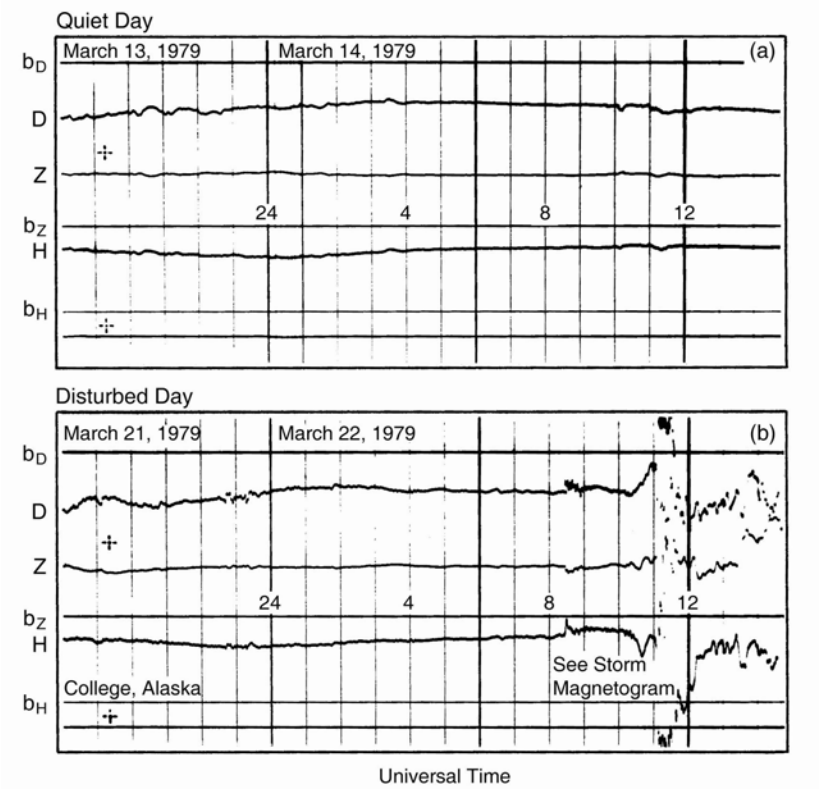

- Early magnetometers were digital. Humans copied dawn readings on paper.
- Magnetic measurements became quantitative about 1550, allowing us to follow the long-term variation of the Earth's internal field.
- Eventually, the strip chart recorder was invented and it was possible to take more rapid data using smoked chart paper, microfilm and eventually pens.

What are the requirements for ground-based magnetometers?

- Interior Field
  - Absolute calibration
  - Vector, not just scalar
  - Uniform distribution
  - Long-term monitoring
  - Digital data
- Exterior Field
  - Vector measurements
  - High latitude emphasis
  - Real-time access
  - Digital data
- ULF Waves
  - Vector measurements
  - Low noise
  - High-timing precision using GPS
  - Near real-time access
  - Digital data
  - Lots of local storage

Scalar Magnetometers

- Proton precession
  - Liquid containing protons (water, kerosene) is excited with a magnetic pulse.
  - Protons precess and damp out.
  - Precession frequently can be detected.
  - Usually has a preferred sense direction because excitation has to have a large component orthogonal to magnetic field.
  - Toroidal sensor is omnidirectional.
  - Is sensitive to presence of magnetic field gradients.

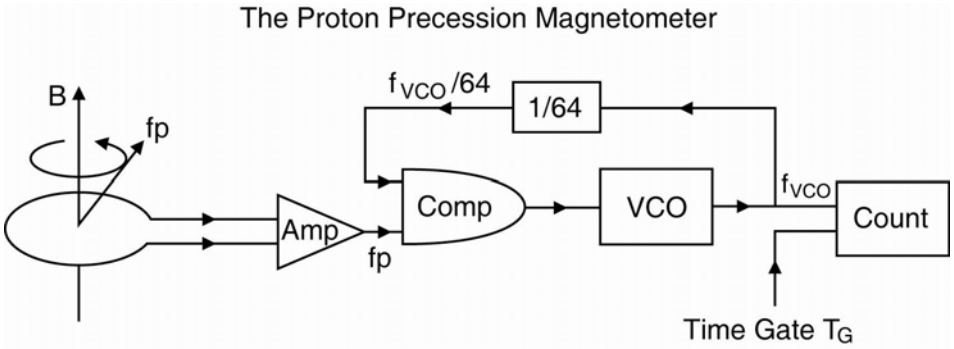

Scalar Magnetometers Continued

- Alkali Vapor Magnetometer
  - Uses Cesium 133, Rubidium 85 or 87
  - Zeeman splitting gives field strength
  - Magnetometer oscillates at about 6.99 Hz nT^{-1}
  - Does not work within 12° of parallel or 7° of normal to the optic axis
  - Use of two twin cell magnetometers reduces dead zone

Helium Vapor Magnetometer

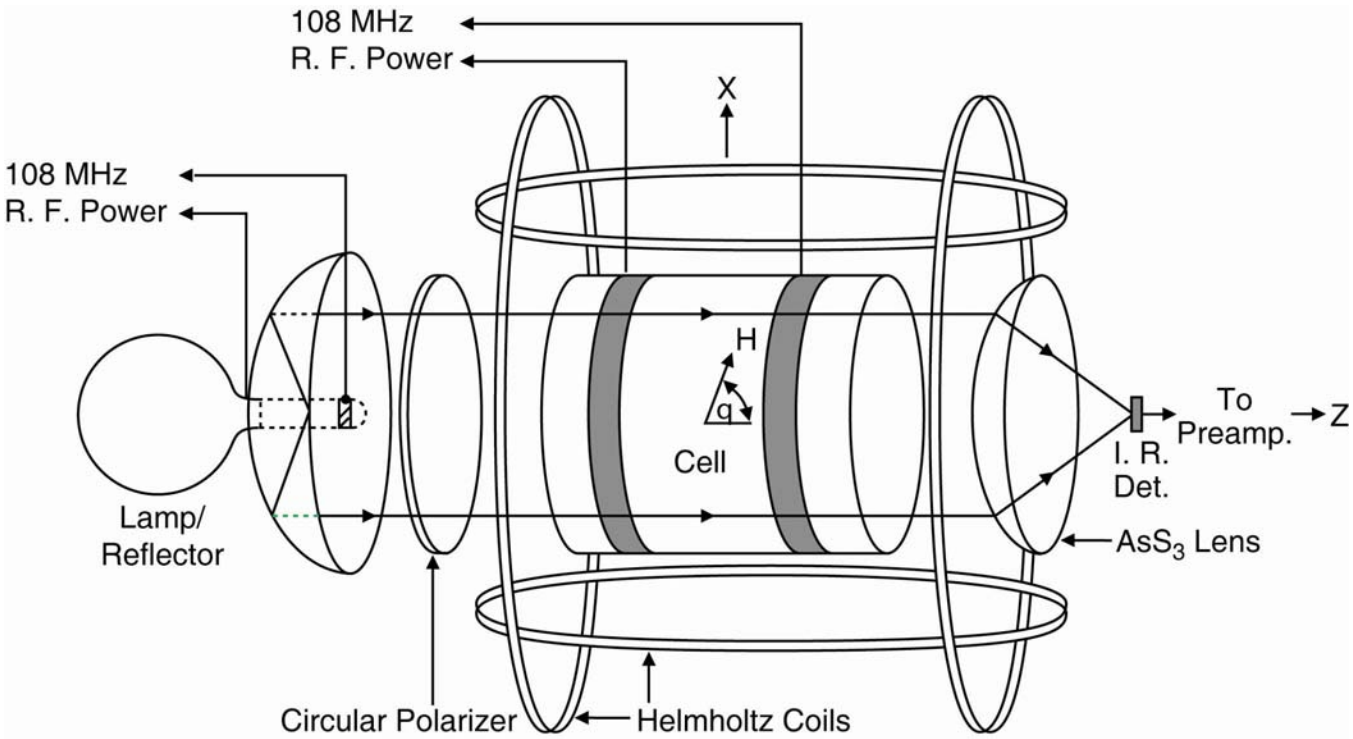

- Zeeman splitting used to measure field - different than rubidium
- Does not oscillate. Uses cell as a null detector
- Subject to light shifts due to Bloch-Siegert effect when applied field is perpendicular to ambient
- Has null zone along optic axis
- Is useful above 250 nT
- As here, can be converted to a vector magnetometer.

Fluxgates

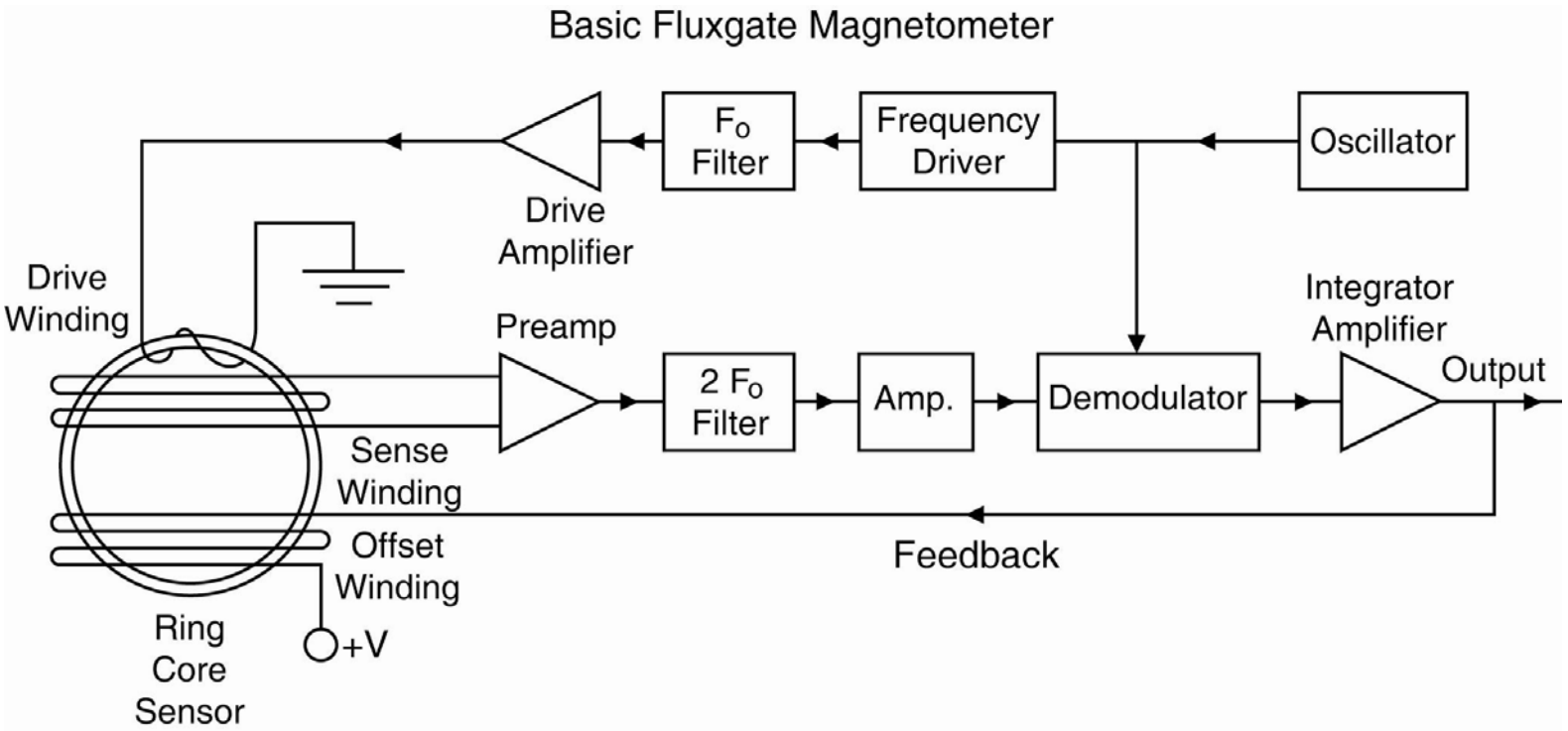

- Three windings around core: drive, sense and feedback.
- AC drive field alternately saturates the core in opposite directions.
- If no ambient field present, then only odd harmonics induced in secondary coil.
- If ambient present, then even harmonics driven in secondary also.
- Feedback coil is powered with steady current that nulls the ambient field.
- The size of the nulling current gives the strength of the ambient field.
- Can measure much better than 1 nT.

Data Acquisition

- Measuring the vector field requires three sensors.
- A multiplexer (MUX) can cycle between the three components and one analog-to-digital converter (ADC) can convert the signals to be saved or transmitted as digital data.

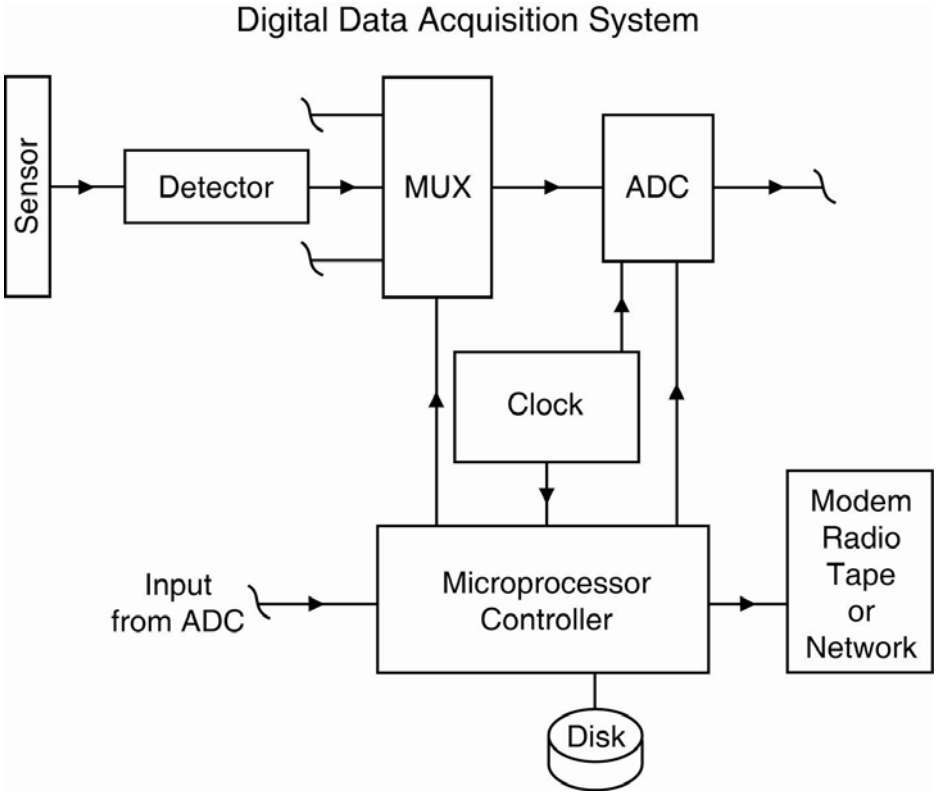

Coordinate System and Indices

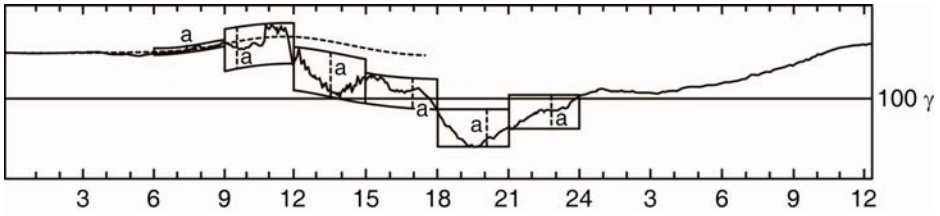

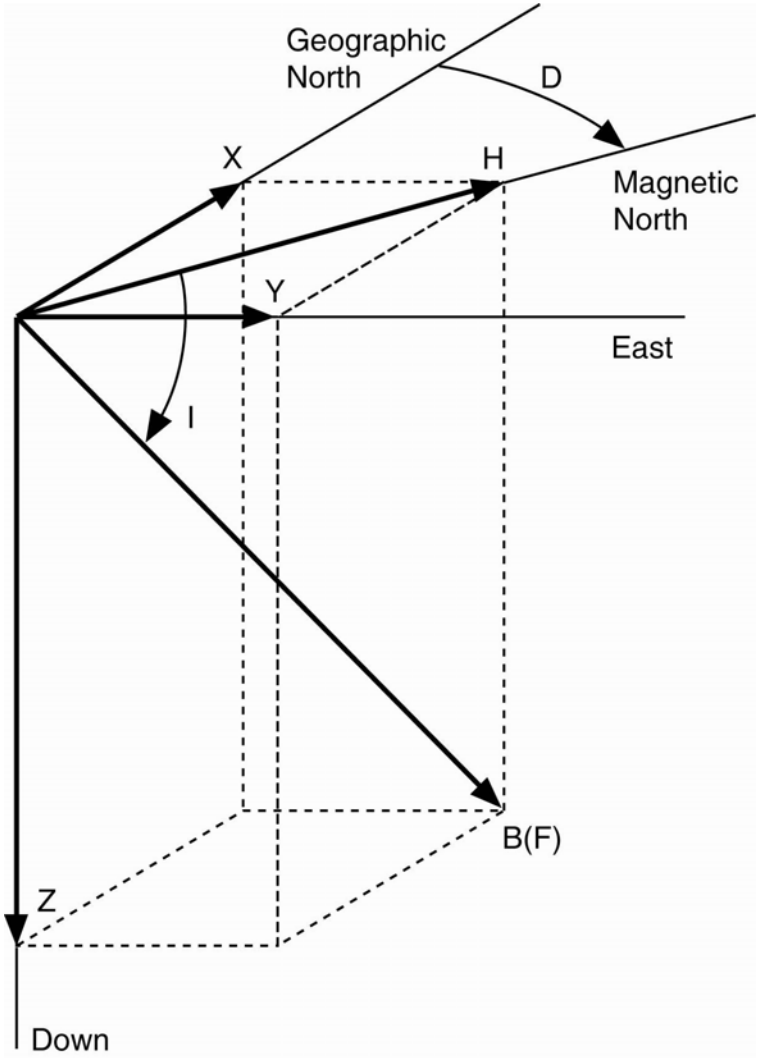

- Traditionally, the magnetic field is positive downward in the northern hemisphere and is positive eastward.
- Magnetic indices allow characterizing of local and global geomagnetic activity.
- Their calculation can be quite complex as illustrated here.

Magnetic Indices: C9, Kp

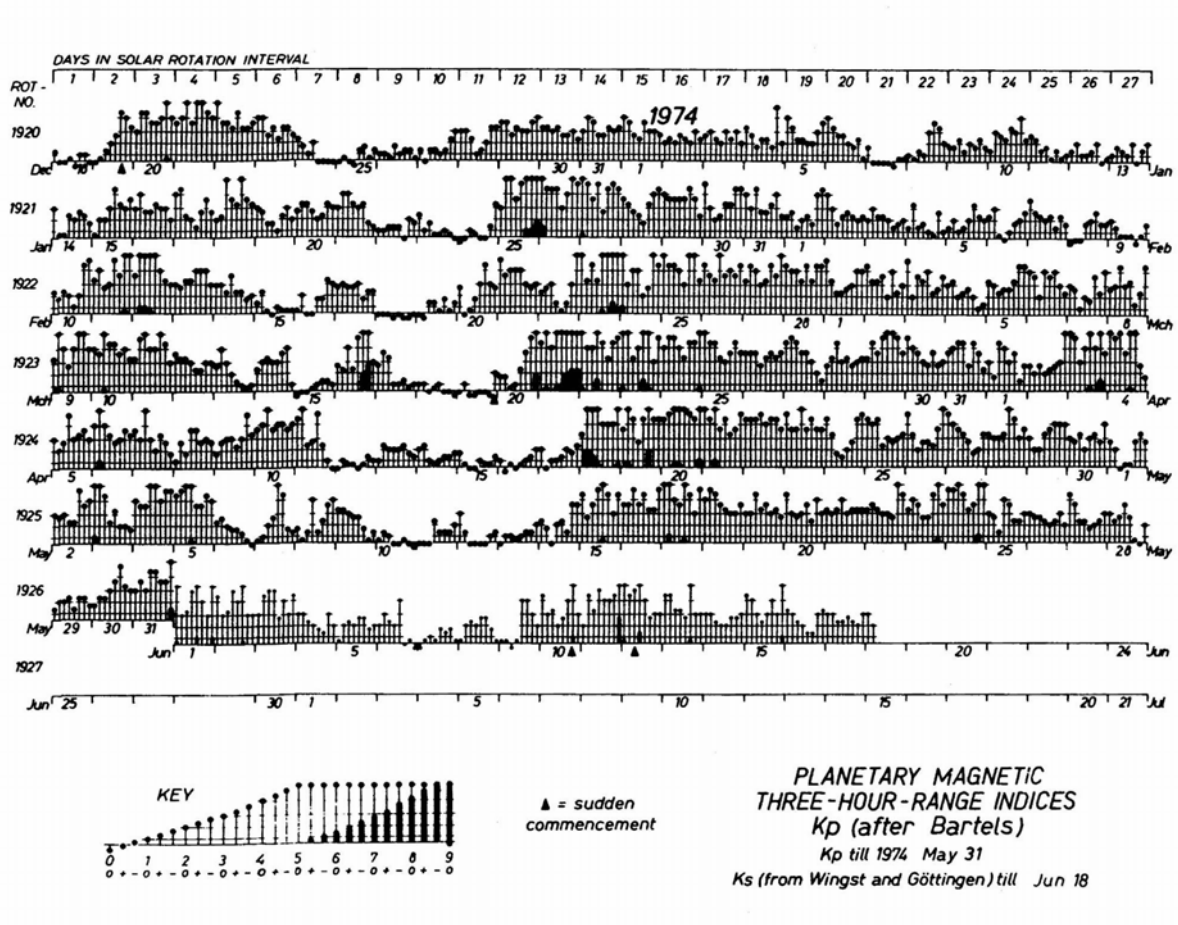

- The publishers of tables of geomagnetic indices became very skilled at displaying the numbers so that they gave an intuitive feeling for their meaning.

THEMIS Ground-based Fluxgate Magnetometers

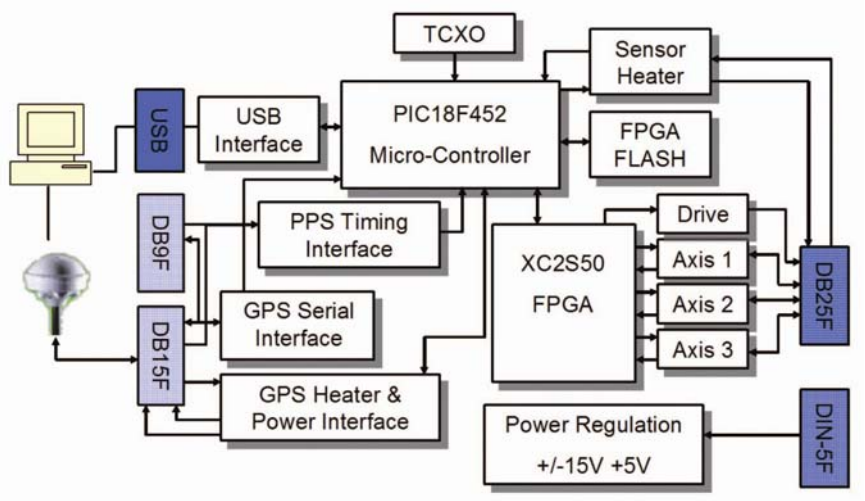

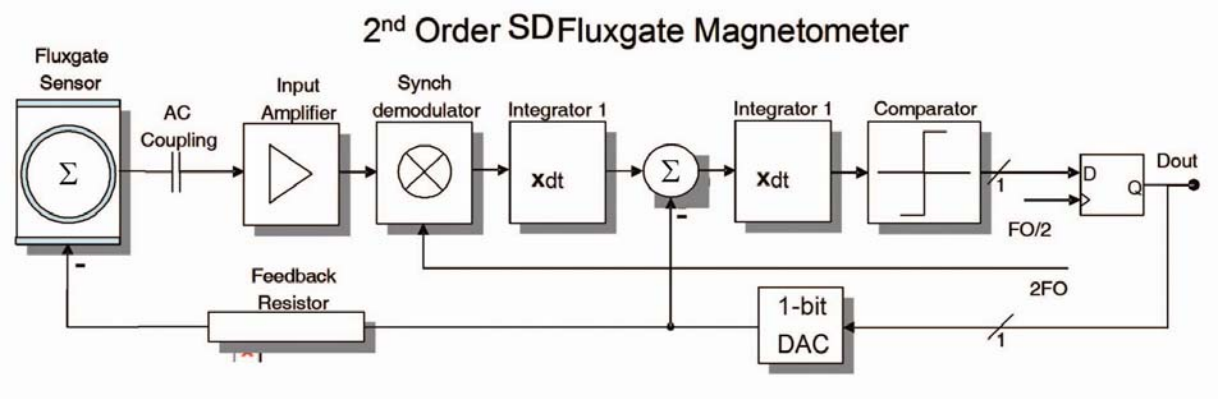

- THEMIS fluxgate magnetometer is installed underground and its sensor temperature kept constant.
- It uses second-order sigma-delta operation to measure the field.

THEMIS Ground-based Fluxgate Magnetometer

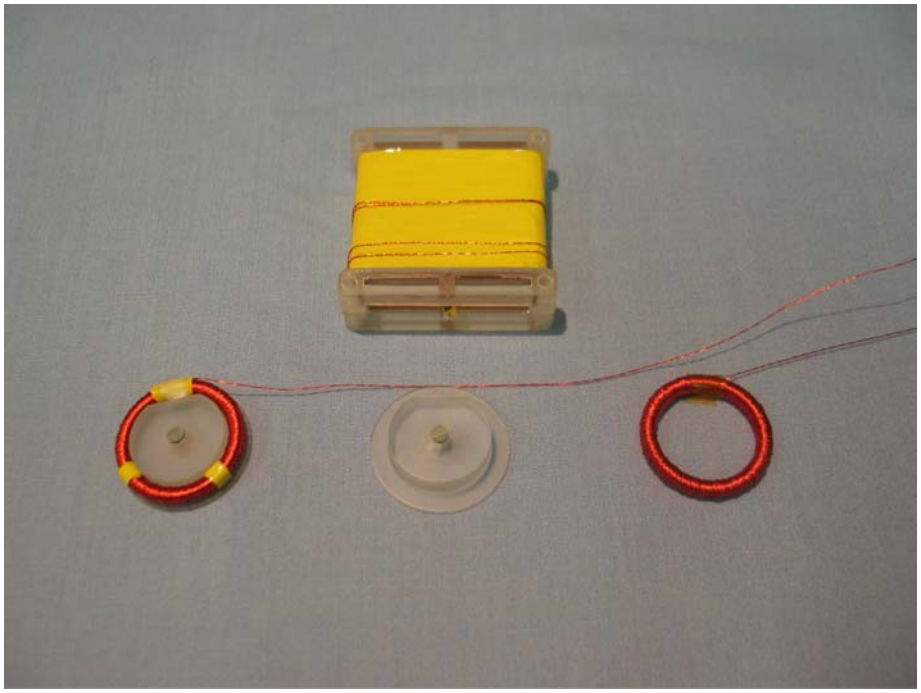

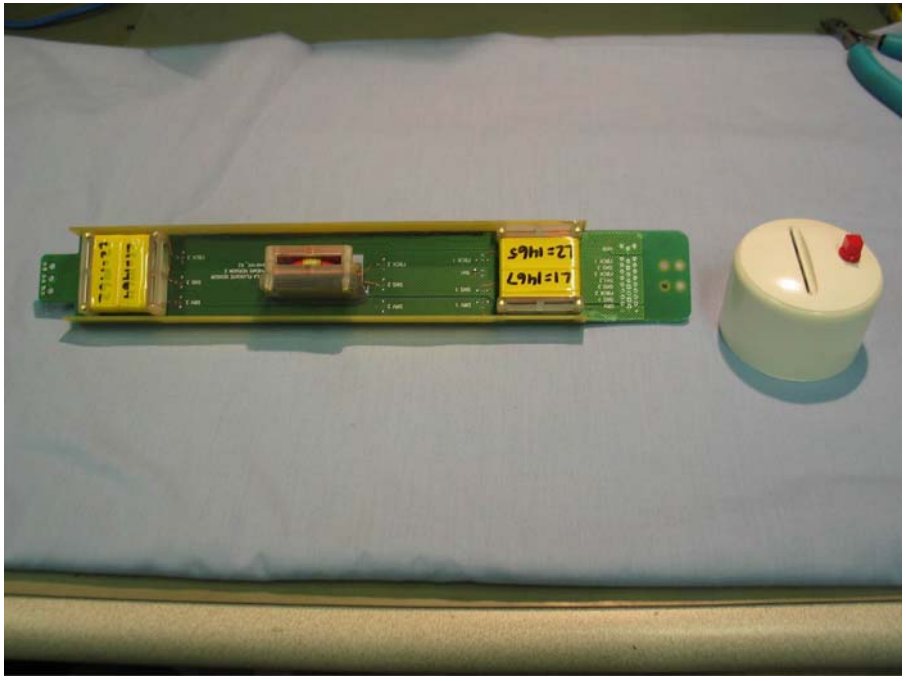

- Three orthogonal sensors are put in a tube on a printed circuit board.

THEMIS Ground-based Fluxgate Magnetometers

- The sensor is put in a PVC tube and connected by a long cable to the electronics.
- The sensor is buried in the ground.

THEMIS Ground-based Fluxgate Magnetometers

- Millisecond timing is provided by a GPS system.
- The full set of equipment can be packed in a small shipping container.

Early Spacecraft Magnetometers

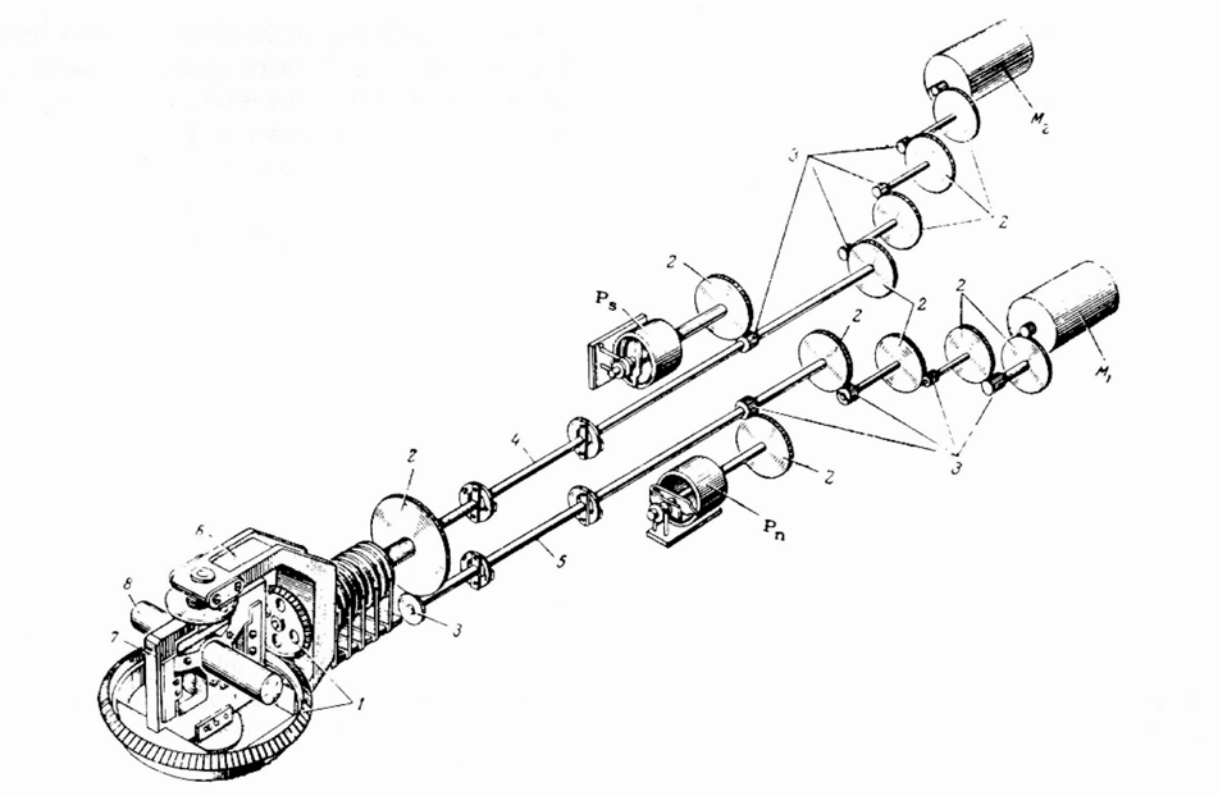

- It was clear that magnetometers were important instruments to carry into space.
- It took some time to move from instruments appropriate to sitting on a concrete pier to measuring on a moving platform.
- This set of motors and drive gears oriented the magnetometer on Sputnik 3. The main sensor (labeled 8) was kept parallel to the Earth's main field.

Early Spacecraft Magnetometers

- A difficulty in space not encountered on the ground is that the magnetic field strength changes over a wide range.
- Early instruments had a limited dynamic range while at the same time, fine precision was needed to resolve waves.
- Dolginov on Sputnik 3 solved the problem with a set of offset fields (top).
- A similar approach was used on OGO-5, ATS1&6, where the offsets were selected automatically. Note that the anti-aliasing filter does interact with the ladder adder when switching occurs, so this is not an ideal solution (bottom).

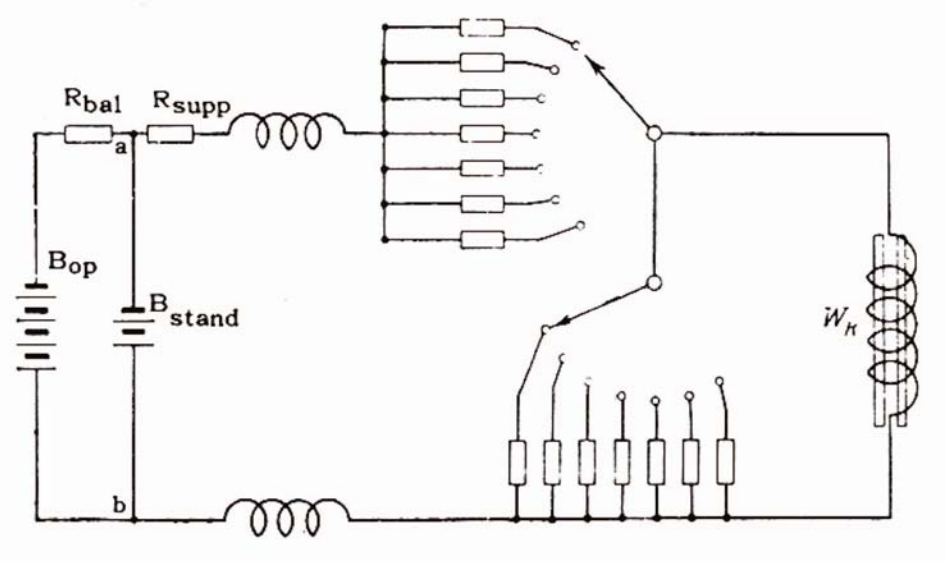

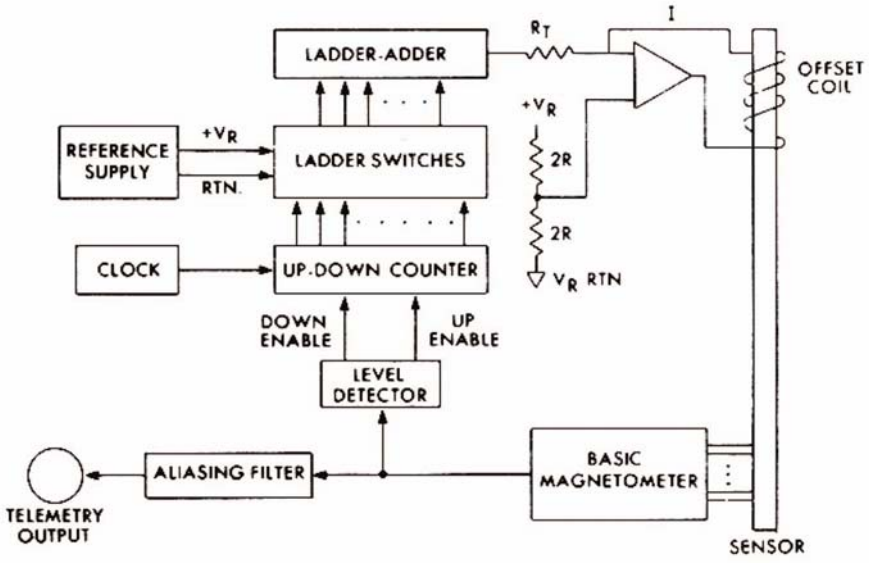

Early Spacecraft Magnetometers

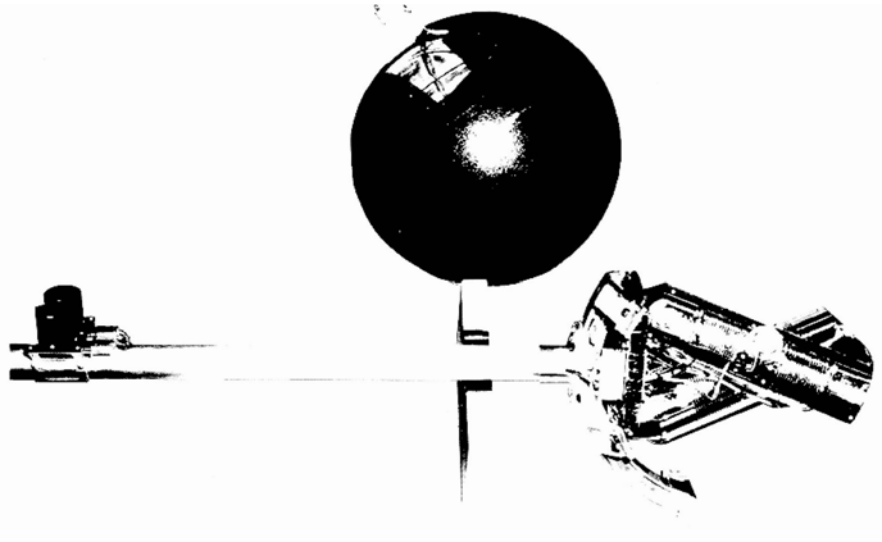

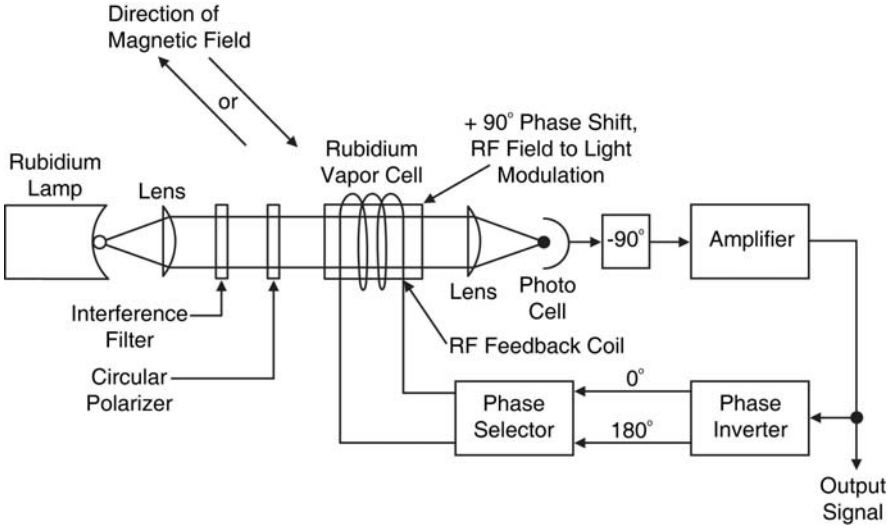

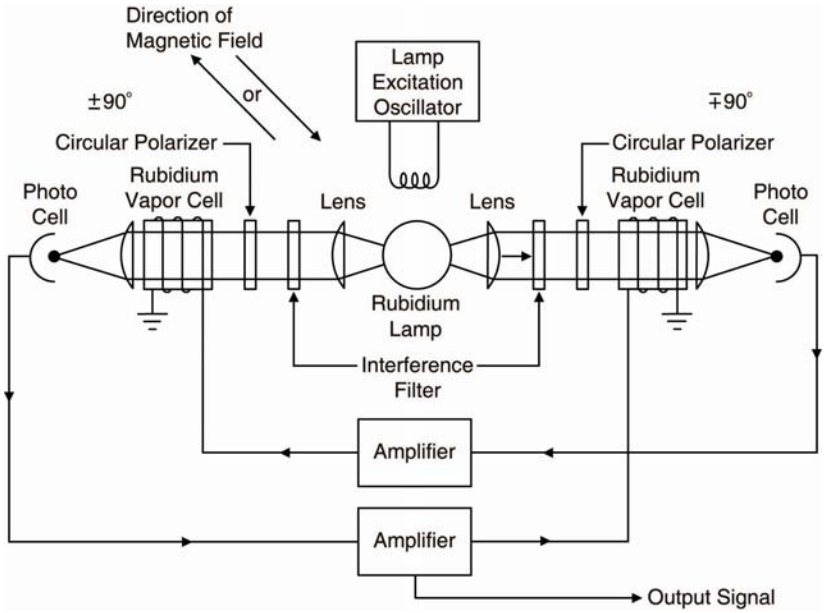

- Attempts to fly rubidium vapor magnetometers were not very successful due to the complexity of the resulting instrument due to dead zones.
- Top right. Single-cell, self-oscillating rubidium vapor magnetometer.
- Bottom right. Twin cell rubidium magnetometer.
- Top left (RHS). Crossed twin cell rubidium magnetometers. Helmholtz coils inside spherical thermal cover (middle) were used to make a vector measurement from the scalar data.

Modern Spacecraft Magnetometers: Vector Helium

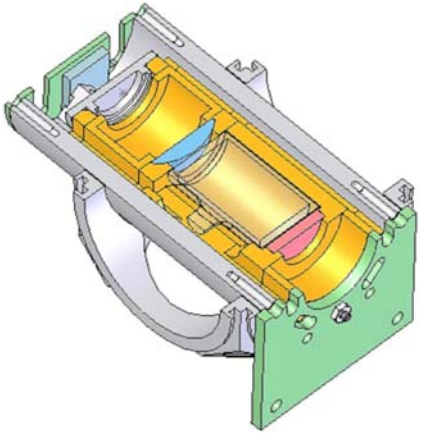

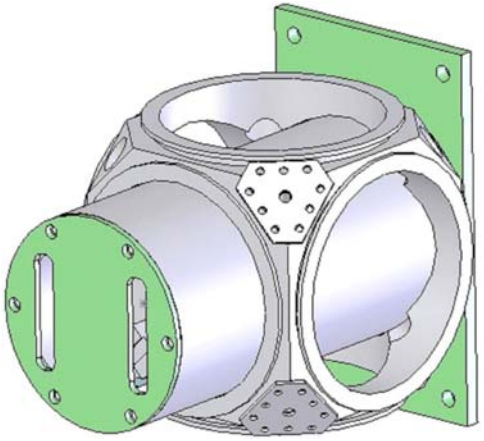

- Vector helium magnetometers are quite stable and have a low noise level, but they are larger and more expensive than fluxgates. They also have a lower bandwidth.
- Attempts are underway to make the current VHM (top left) smaller. A prototype helium cell is shown bottom left. It would be packaged in the structure on the right.

Modern Spacecraft Magnetometers: Fluxgates

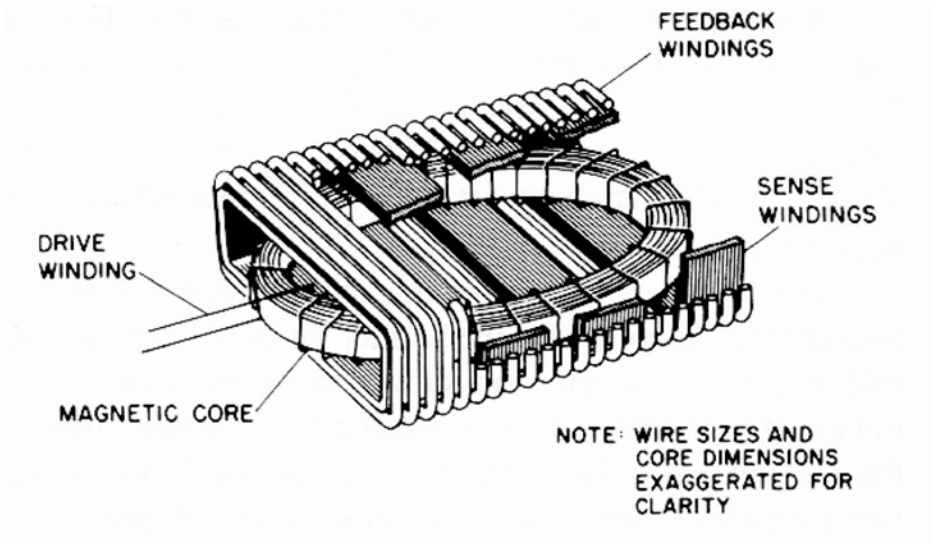

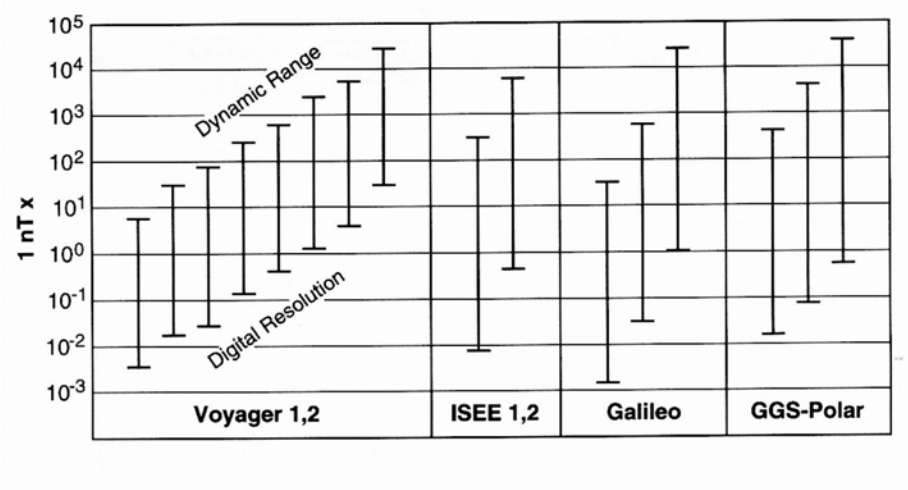

- A fluxgate sensor is small and rugged. An orthogonal array is made of the sensors such as that in the upper left. The accompanying electronic circuits can be the size of a large postage stamp.
- Magnetometers for planetary magnetospheres often need a large dynamic range. One way to achieve this is with many gain changes (top right). We try to minimize this with A/O converters with a large number of bits.
- If one cannot anticipate the time for again change, one can devise an automatic method for doing this (bottom right).

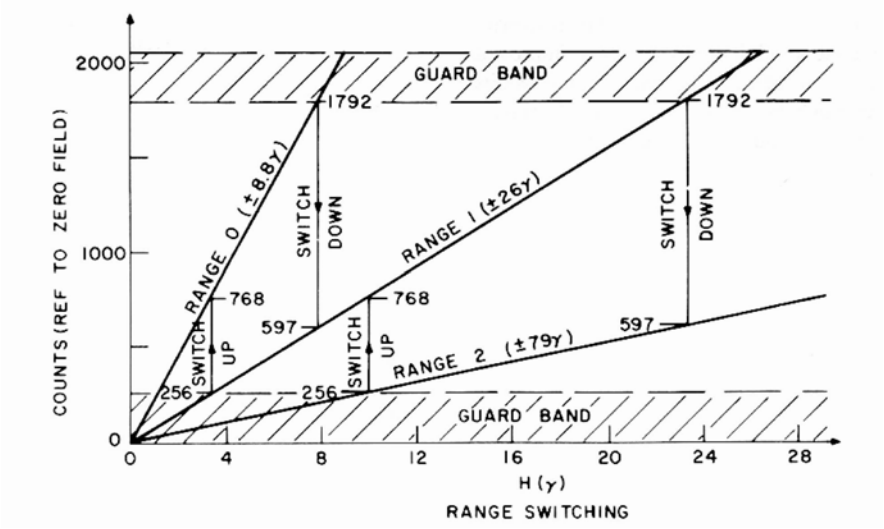

Modern Magnetometers: Multiple Uses

- A magnetometer's data is used many different ways.
  - On board, the magnetic field might be used in the processing of the data from another instrument.
  - It might be used to decide when to select burst mode data.
  - It is transmitted to Earth at a low data rate.
- The software in the instrument can become quite complex as a result. In the early days, this taxed the instrument's central processing unit.

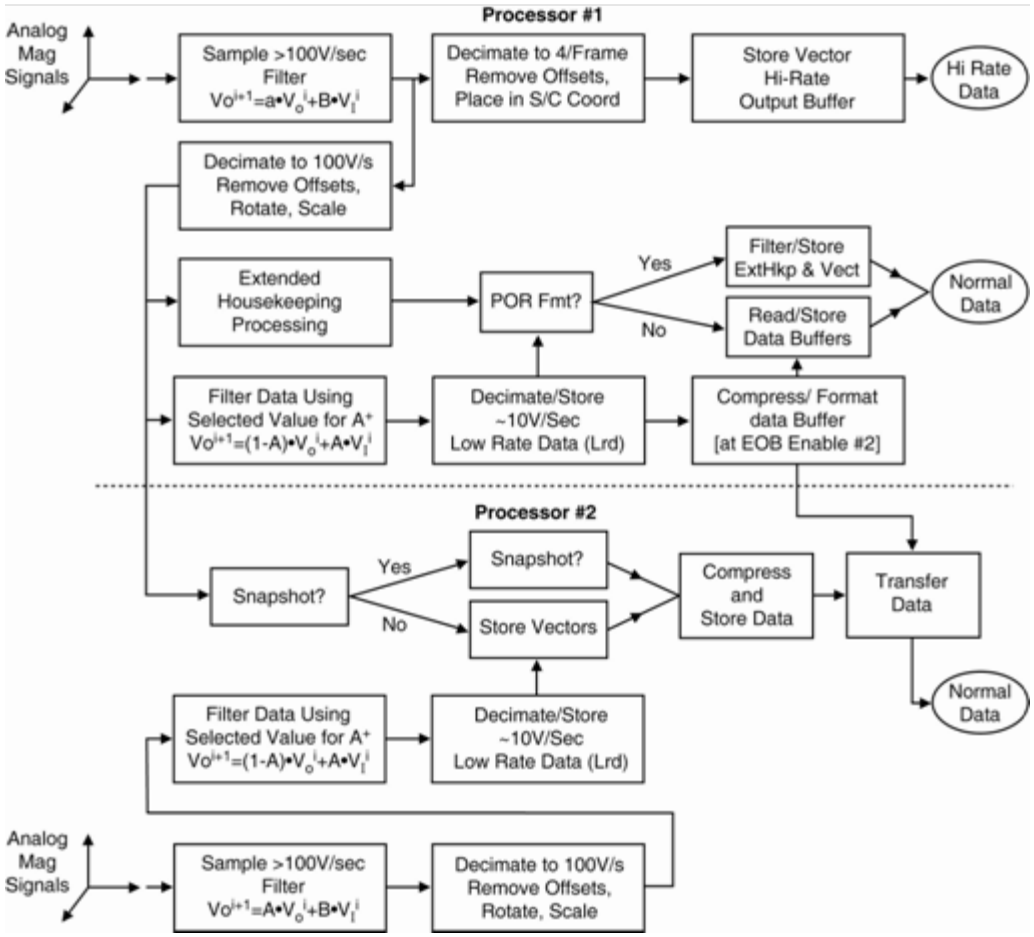

Measurements on a Rotating Platform

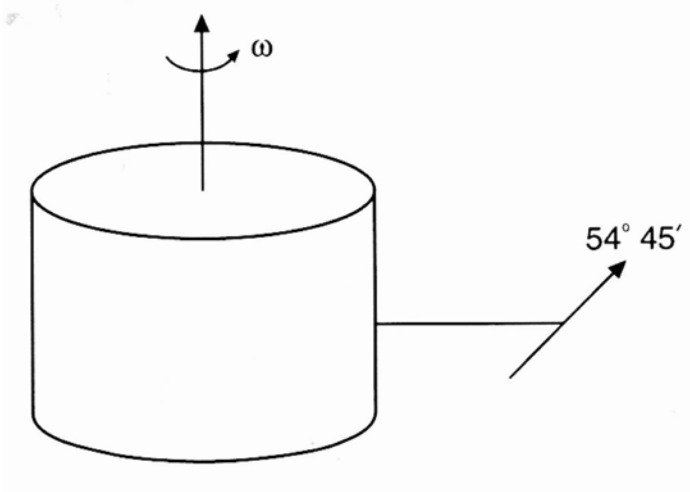

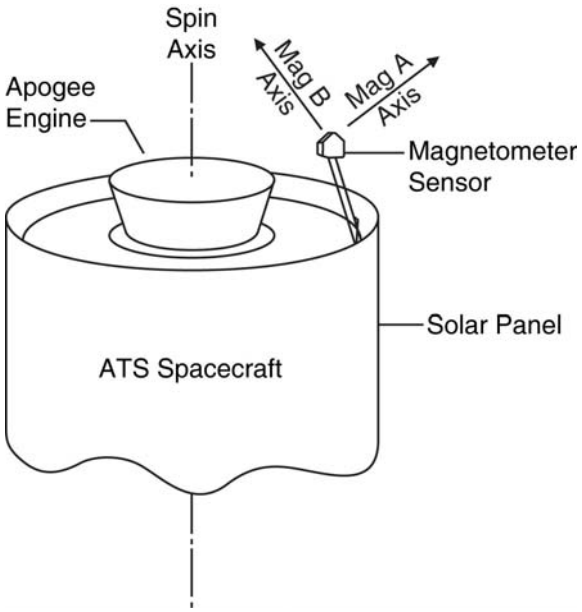

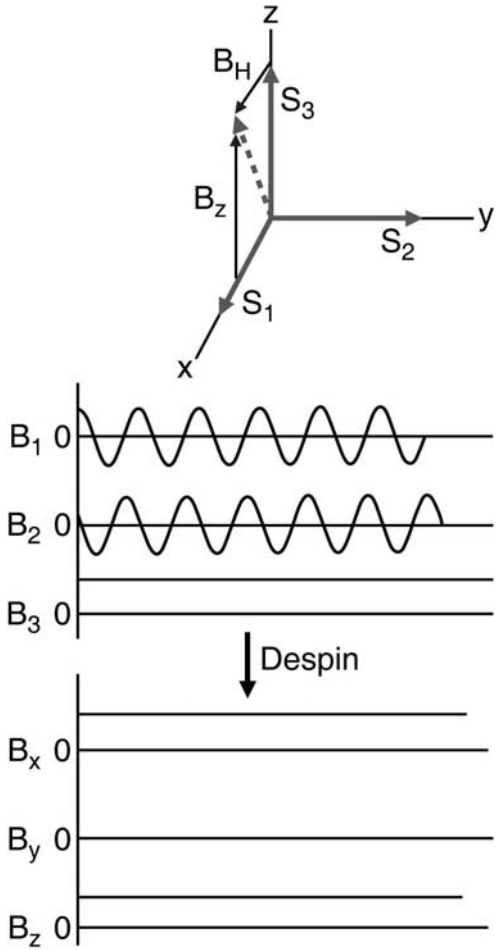

- There are advantages to a spinning spacecraft for measuring the magnetic field, but data reduction can become much more difficult.
- Pioneer 6, 7, and 8 (top left) used a single tilted sensor; only if the field is constant can it be reconstructed this way.
- ATS-1 (middle) used two tilted sensors. This only improves the situation a little.
- In practice, one needs three orthogonal sensors and the data needs to be despun for use.

Problems with Rotating Sensors

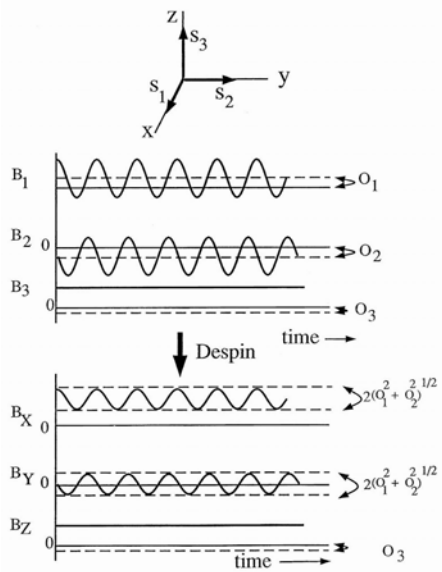

Orthogonal, aligned sensors. Finite offsets

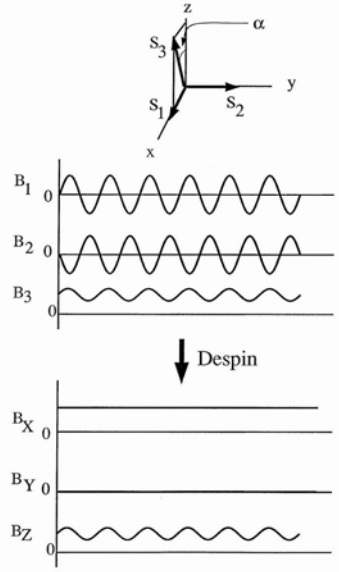

No offsets, Sensor 3 not aligned with spin axis

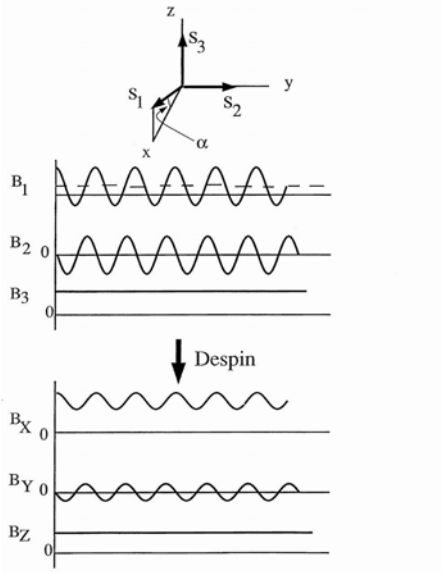

No offsets. Sensor 1 not orthogonal to z axis

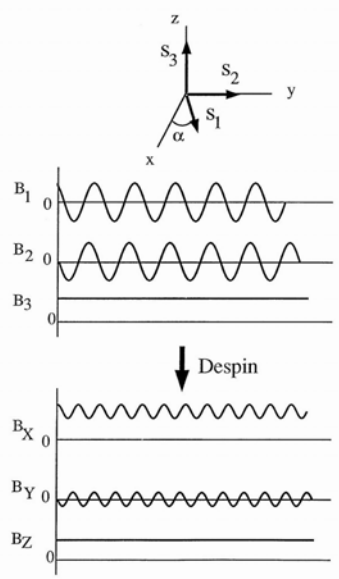

No offsets. Sensor 1 not orthogonal to sensor 2

Summary

- Magnetometers are essential for solar terrestrial research and space plasma exploration.
- Magnetometers have evolved greatly since the beginning of the space age.
- They are now small and take very little power.
- They do like a magnetically clean environment, but techniques exist for mitigating some magnetic sources on spacecraft.

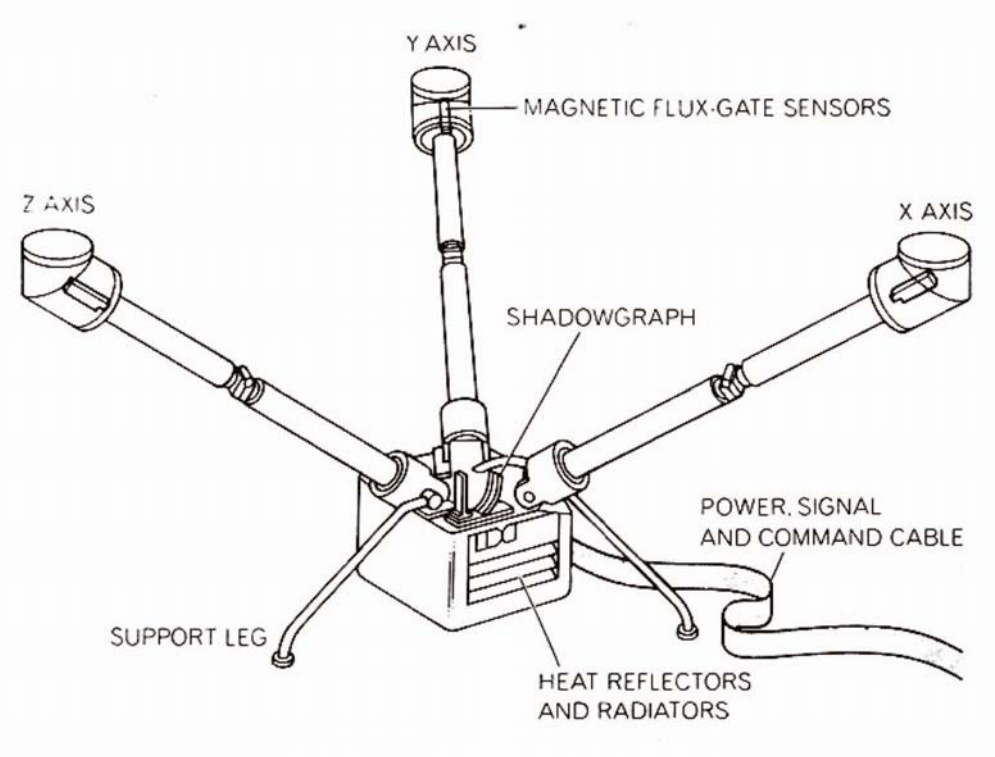

Apollo Lunar Surface Experiment Package Magnetometer